US 20220268543A1

(19) United States
(12) Patent Application Publication
Titus et al.
(10) Pub. No.: US 2022/0268543 A1
(43) Pub. Date: Aug. 25, 2022

(54) **TRANSFORMER SUB-PISTOL FIREARM**

(71) Applicants: **Lemoy Titus**, Randolph, MA (US); **Patrick Stanley**, York Town (JM)

(72) Inventors: **Lemoy Titus**, Randolph, MA (US); **Patrick Stanley**, York Town (JM)

(21) Appl. No.: **17/699,798**

(22) Filed: **Mar. 21, 2022**

Related U.S. Application Data

(63) Continuation of application No. 17/181,664, filed on Feb. 22, 2021, now Pat. No. 11,306,986.

Publication Classification

(51) **Int. Cl.**

F41A 11/04	(2006.01)
F41A 19/32	(2006.01)
F41A 19/35	(2006.01)
F41A 9/37	(2006.01)
F41A 3/66	(2006.01)

(52) **U.S. Cl.**

CPC ***F41A 11/04*** (2013.01); ***F41A 19/32*** (2013.01); ***F41A 19/35*** (2013.01); ***F41A 9/37*** (2013.01); ***F41A 3/66*** (2013.01)

(57) **ABSTRACT**

A firearm is disclosed which advantageously allows for firing from two different magazines, one in a magazine well ahead of a trigger, and a second magazine held in a handle of a pistol grip of the firearm. This allows for both sub-machine gun and pistol firing configurations, allowing for increased firing capacity and allowing the firearm to continuously fire while reloading.

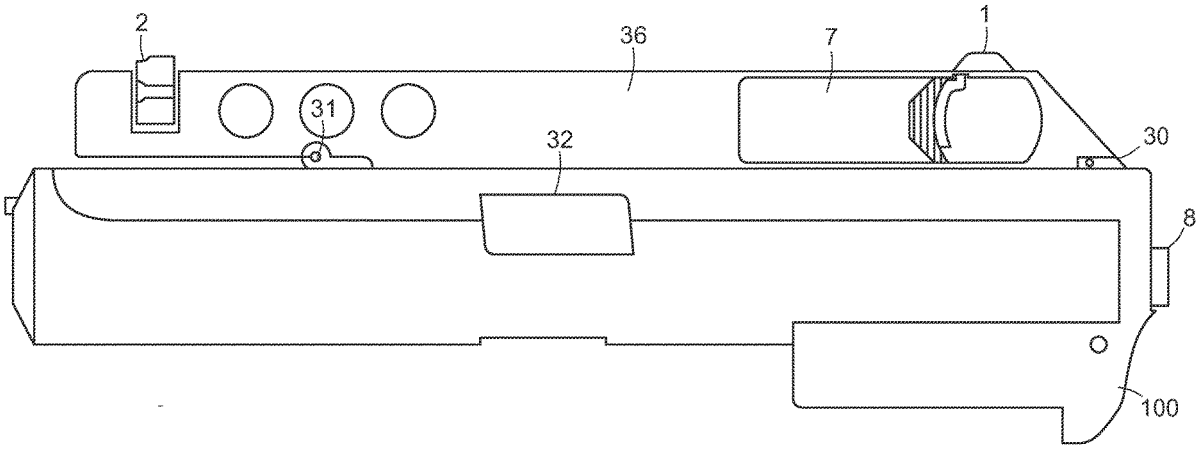

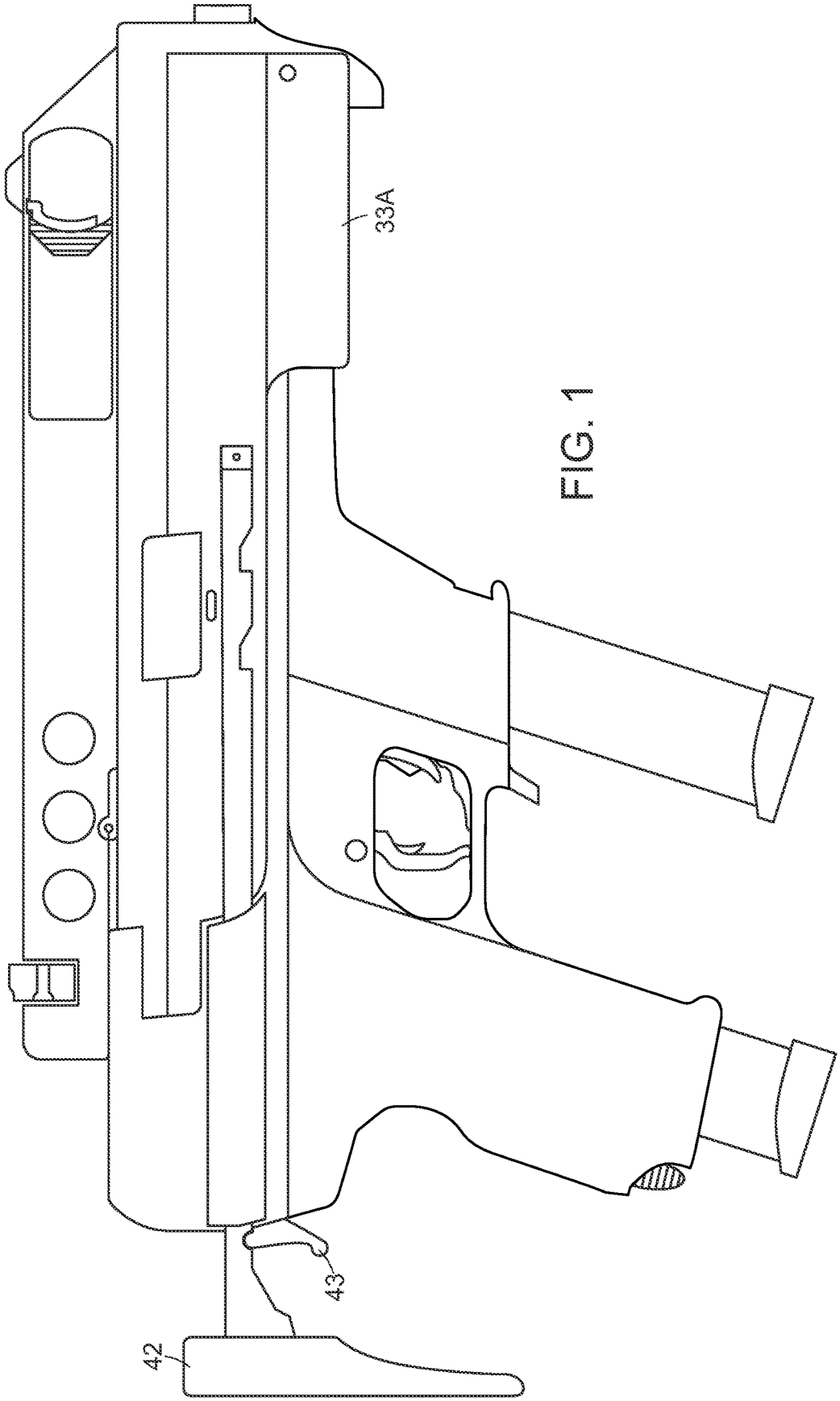

FIG. 1

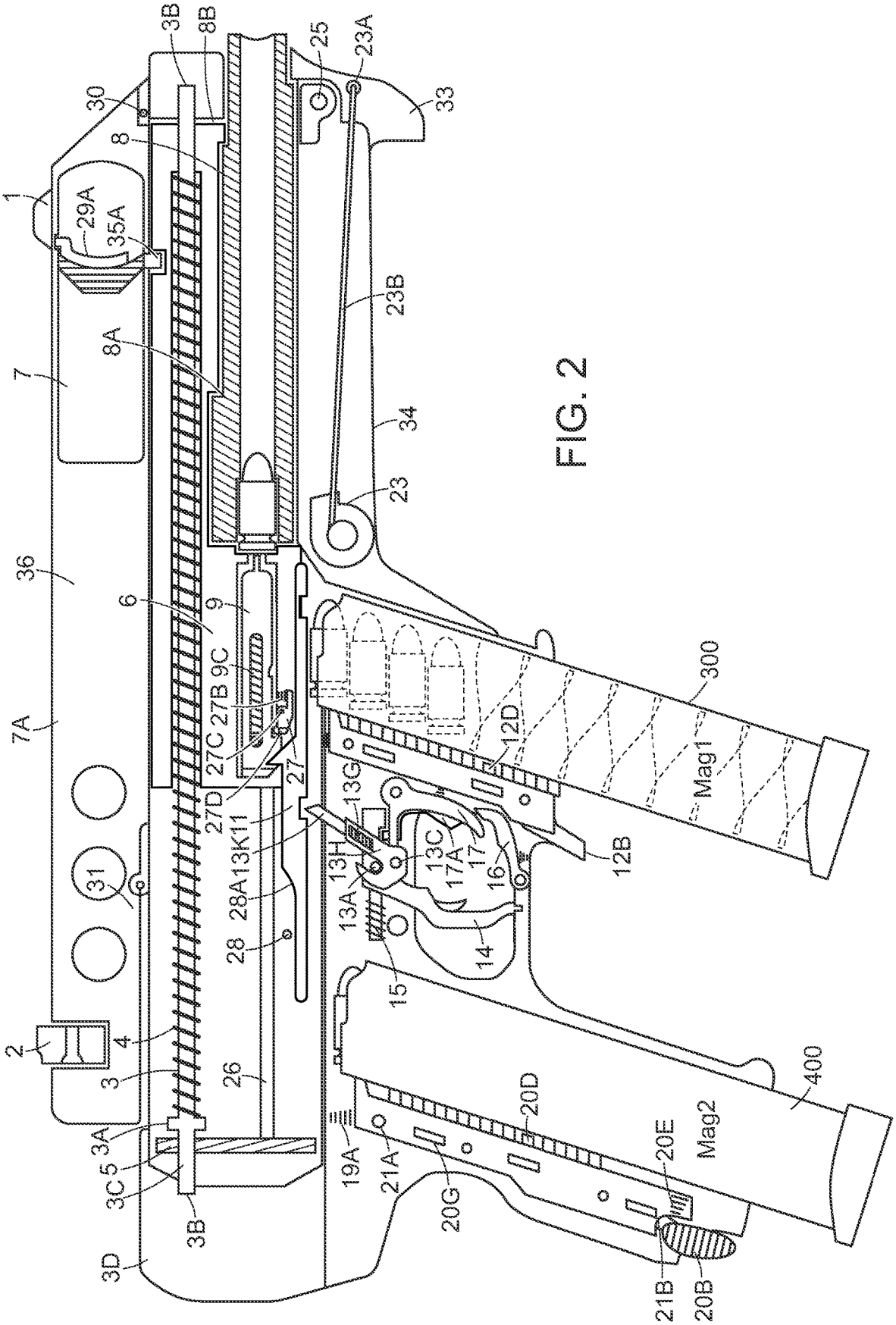
1
2
3
3A
3B
3C
3D
4
5
6
7
7A
8
8A
8B
9
9C
11
12B
12D
13A
13C
13G
13H
13K
14
15
16
17
17A
19A
20B
20D
20E
20G
21A
21B
23
23A
23B
25
26
27
27B
27C
27D
28
28A
29A
30
31
33
34
35A
36
300
400
Mag1
Mag2

FIG. 2

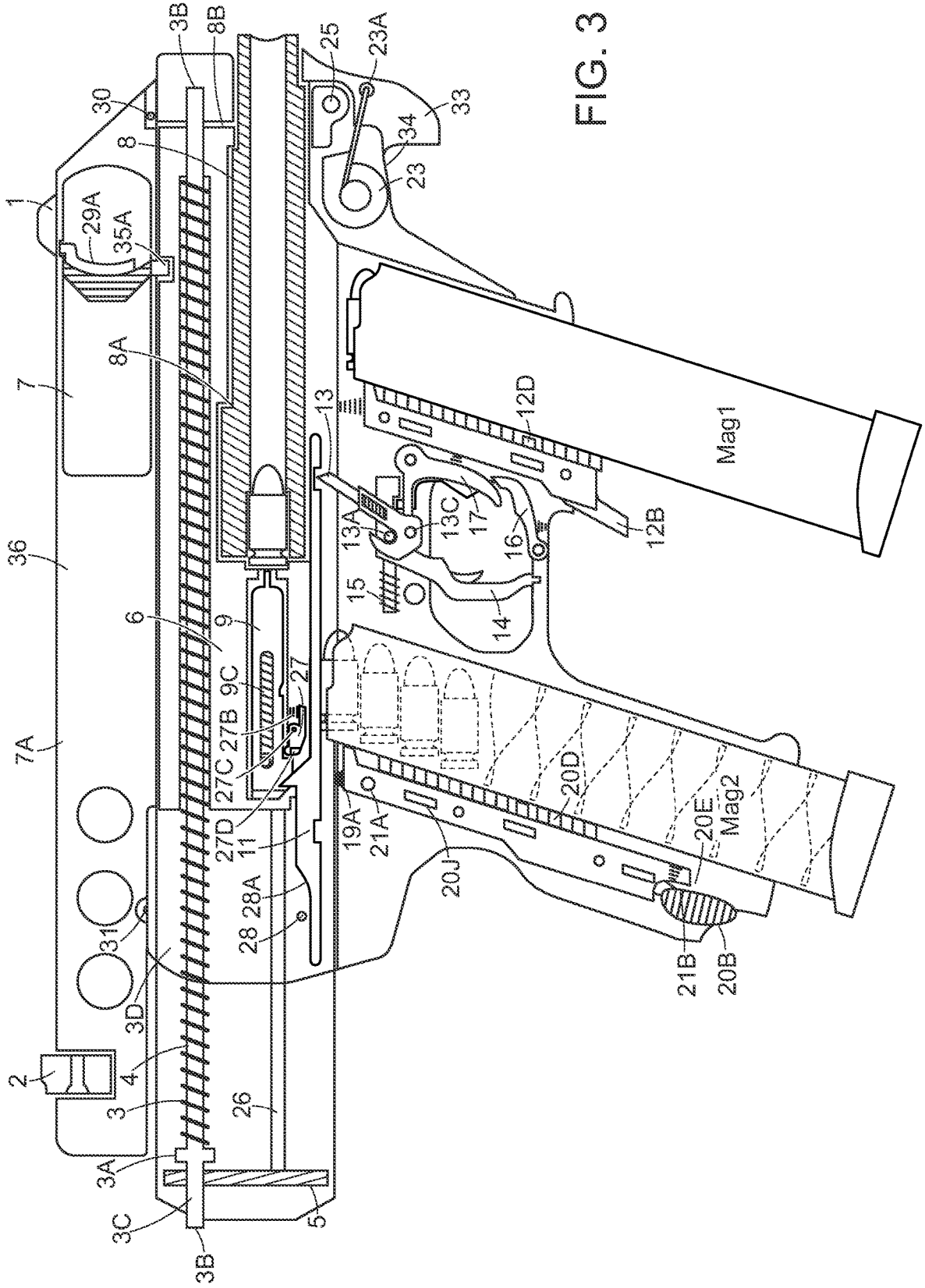
1
2
3
3A
3B
3C
3D
4
5
6
7
7A
8
8A
8B
9
9C
11
12B
12D
13
13A
13C
14
15
16
17
19A
20B
20D
20E
20J
21A
21B
23
23A
25
26
27
27B
27C
27D
28
28A
29A
30
31
33
34
35A
36
Mag1
Mag2

FIG. 3

FIG. 4A

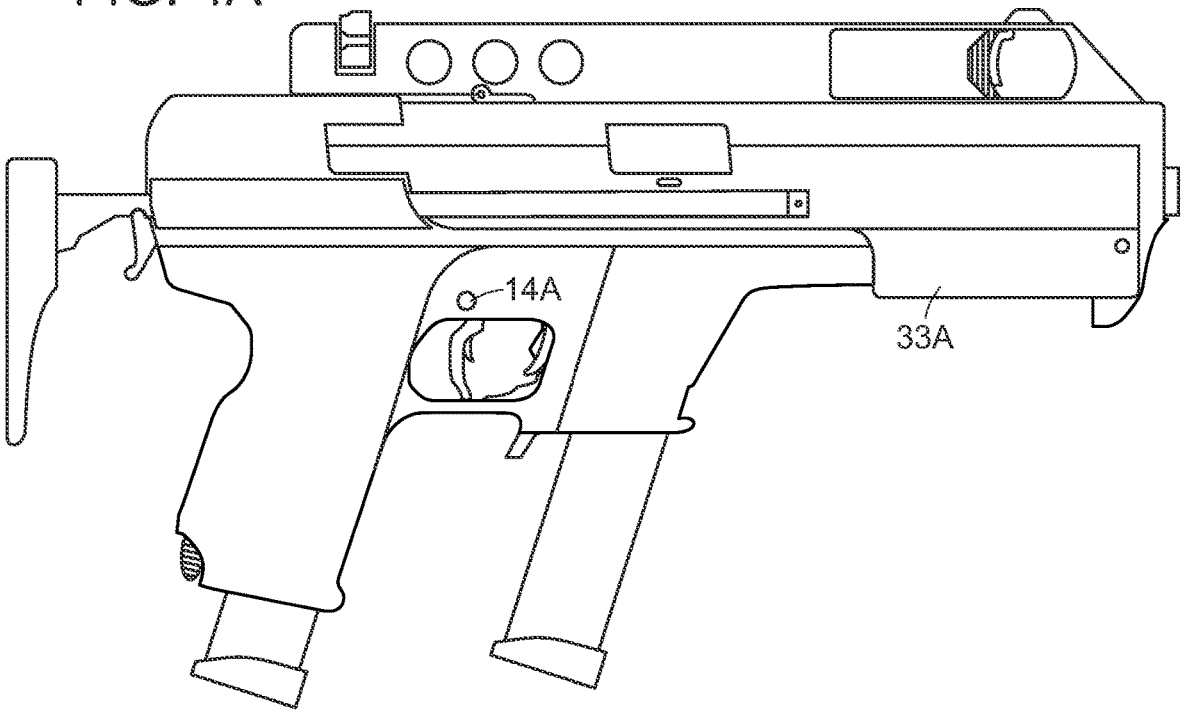

FIG. 4B

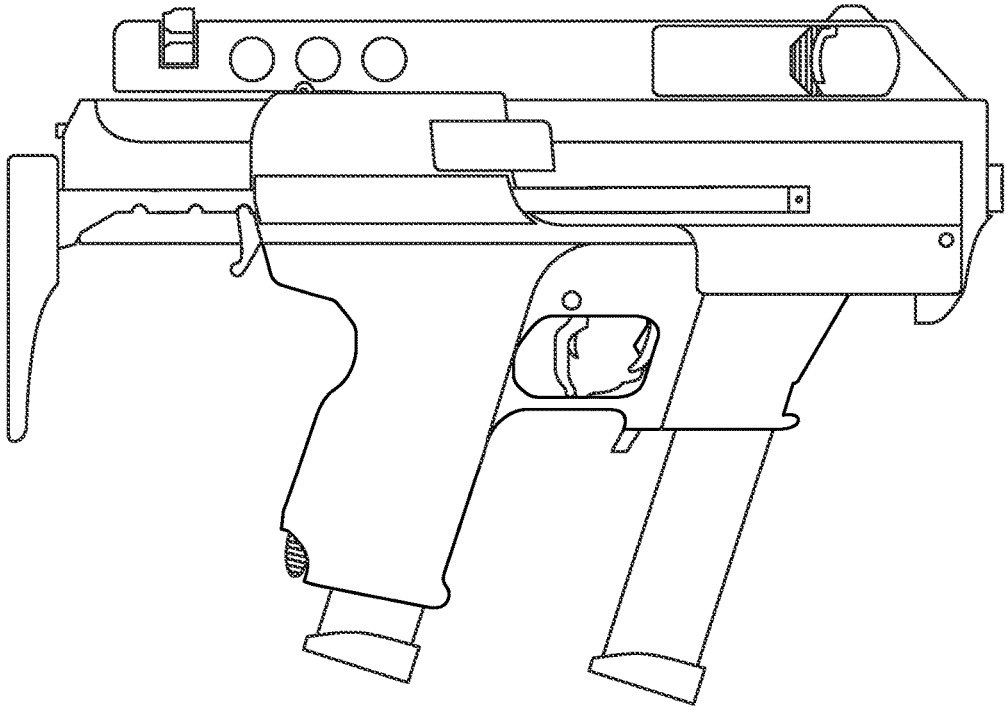

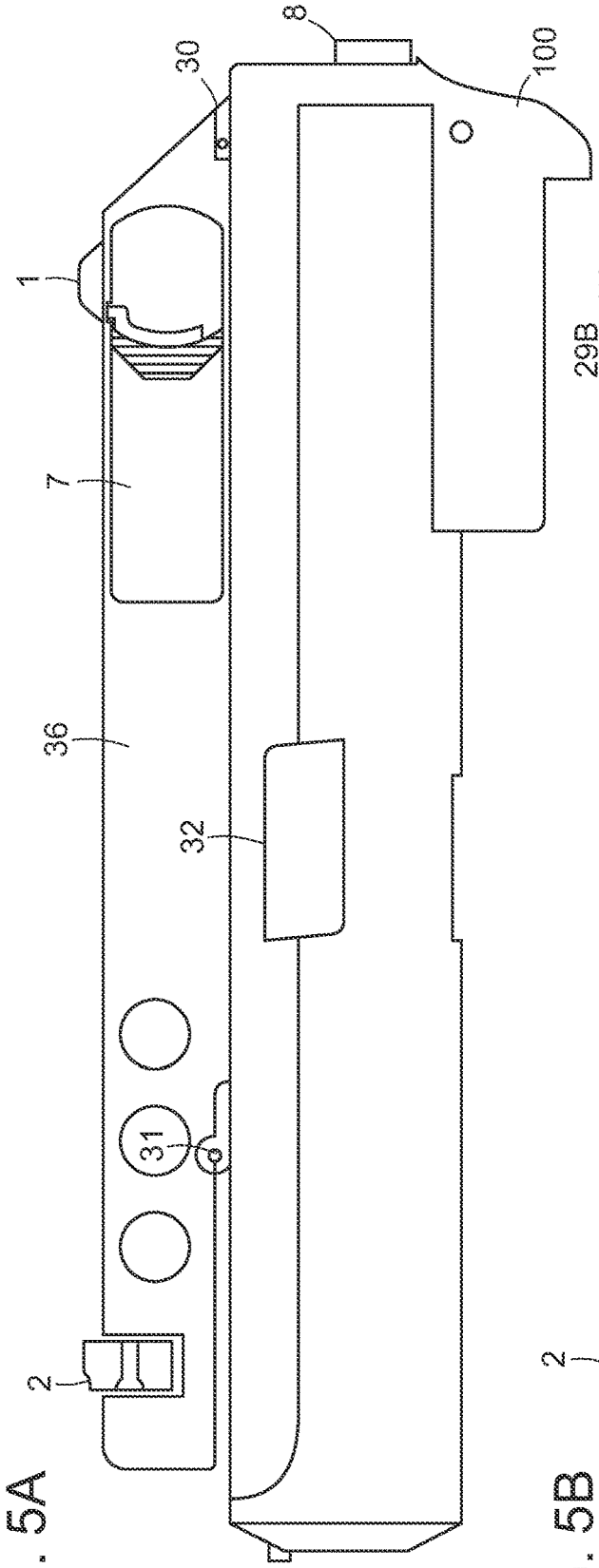
1
2
7
8
30
31
32
36
100

FIG. 5A

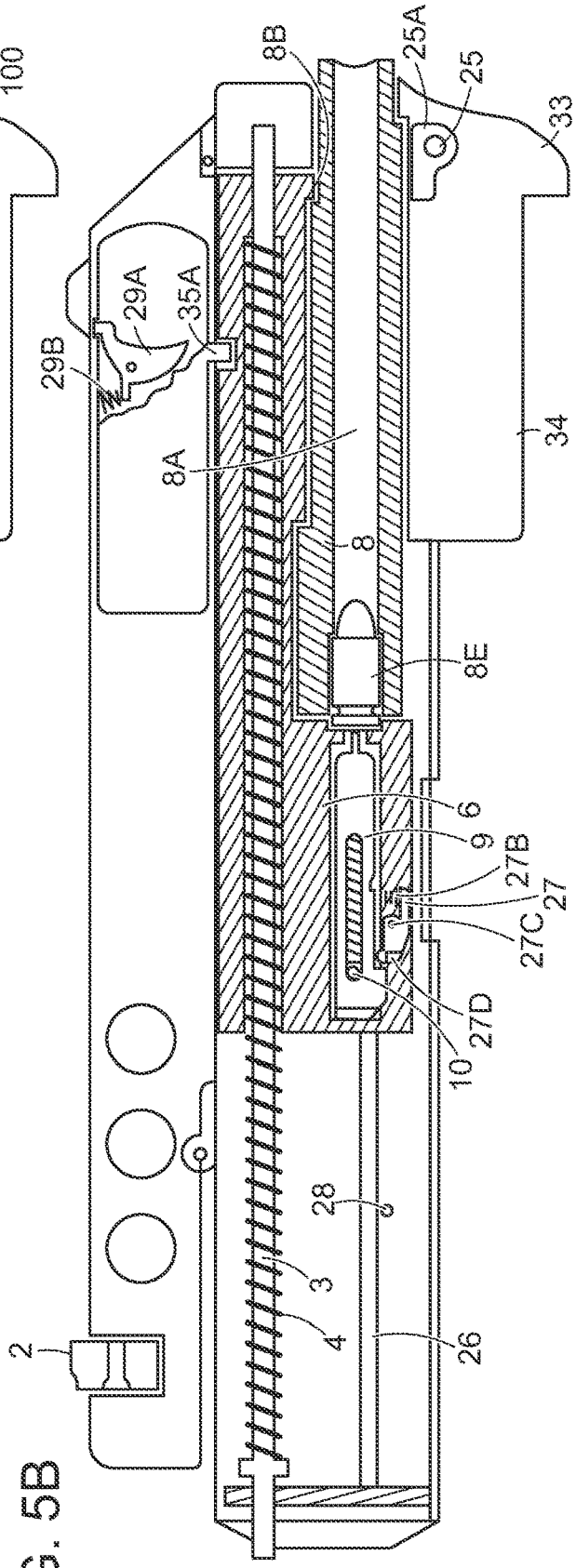
2
3
4
6
8
8A
8B
8E
9
10
25
25A
26
27
27B
27C
27D
28
29A
29B
33
34
35A

FIG. 5B

FIG. 5C

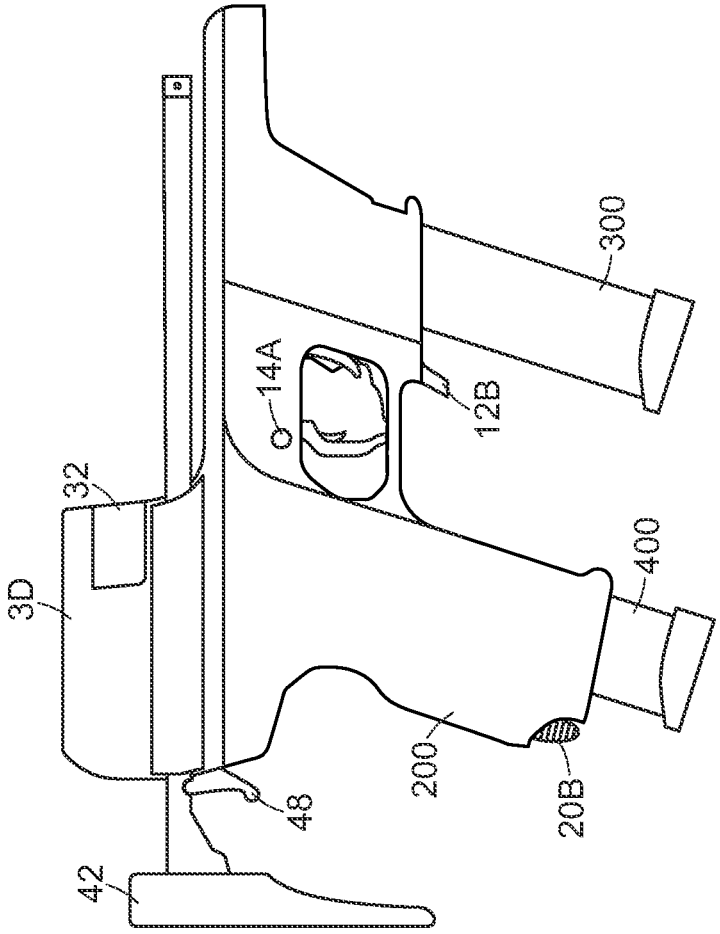

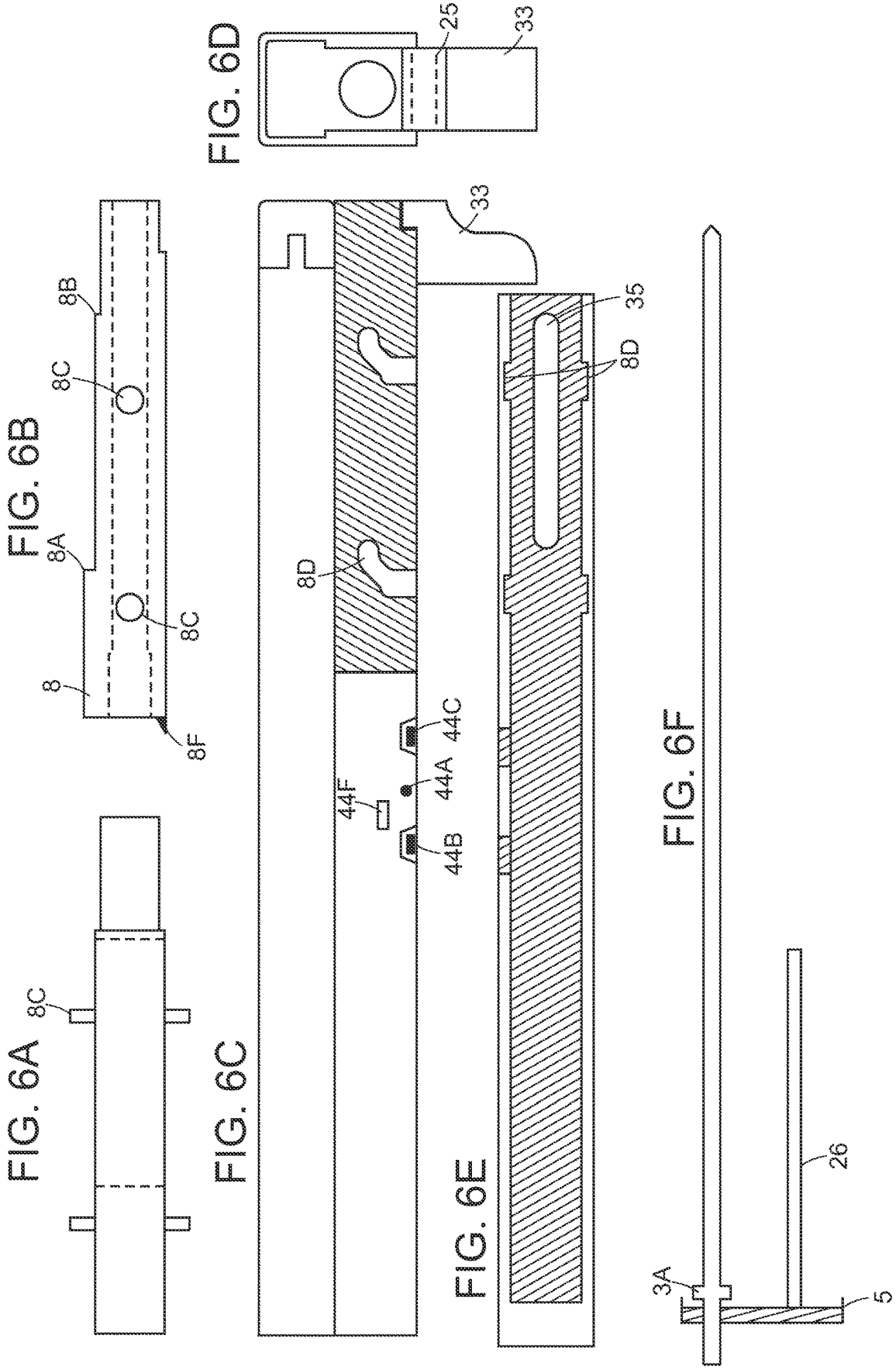
FIG. 6A
8C
FIG. 6B
8
8A
8B
8C
8C
8F
FIG. 6C
8D
44F
44B
44A
44C
FIG. 6D
25
33
FIG. 6E
33
35
8D
FIG. 6F
3A
26
5

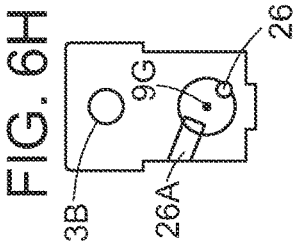

FIG. 6H

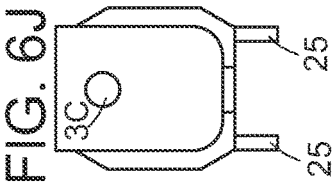

FIG. 6J

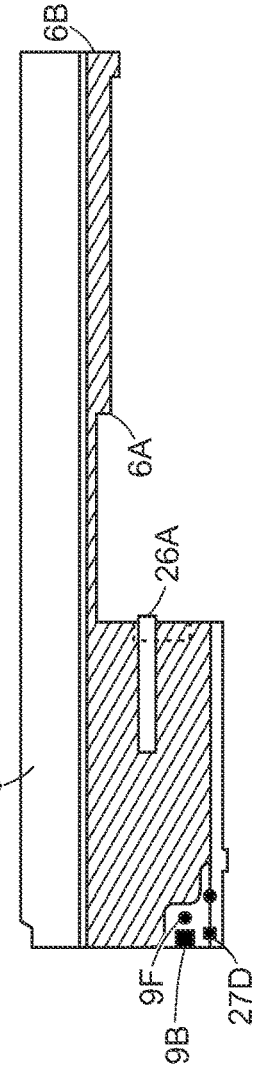

FIG. 6I

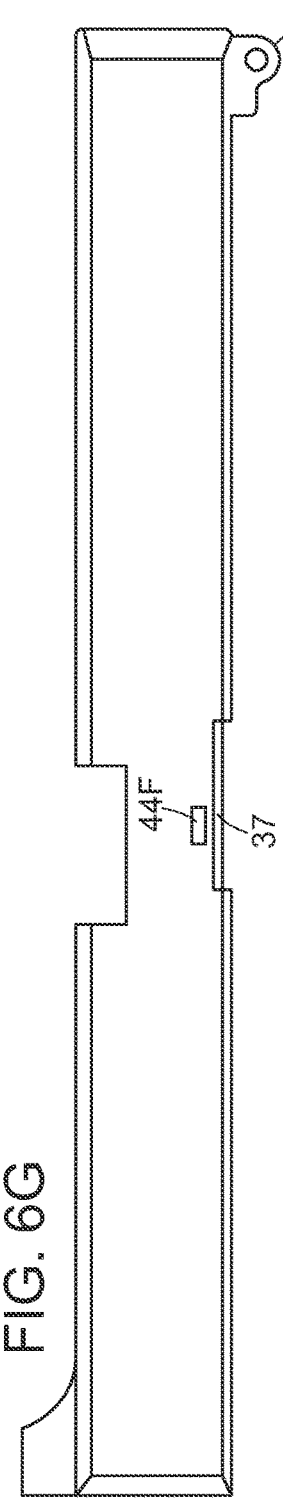

FIG. 6G

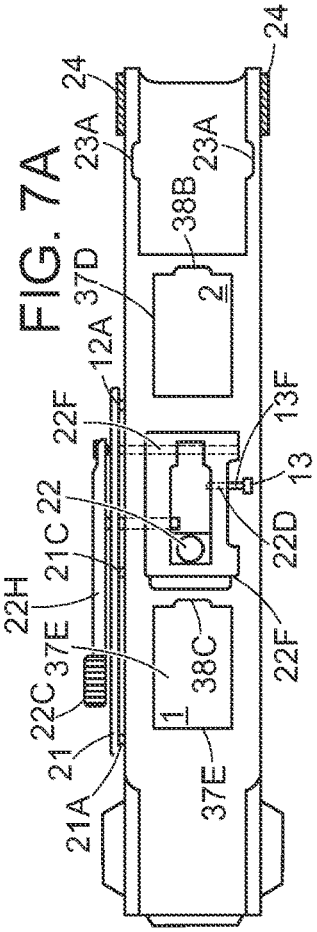

FIG. 7A

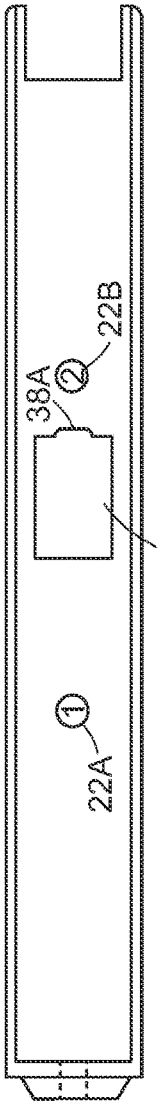

FIG. 7B

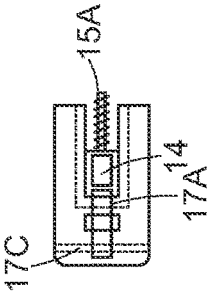

FIG. 7C

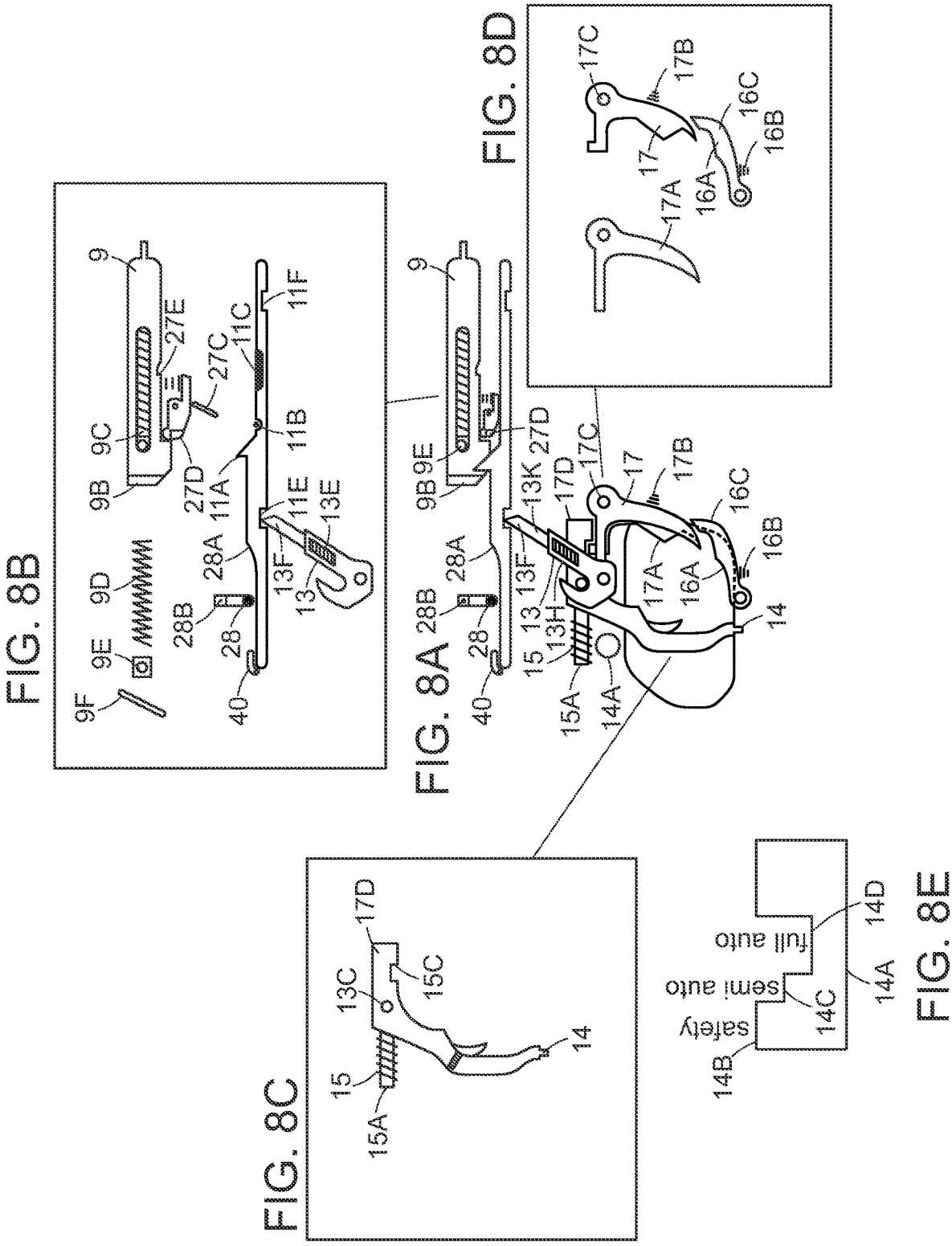

FIG. 8B

FIG. 8A

FIG. 8D

FIG. 8C

FIG. 8E

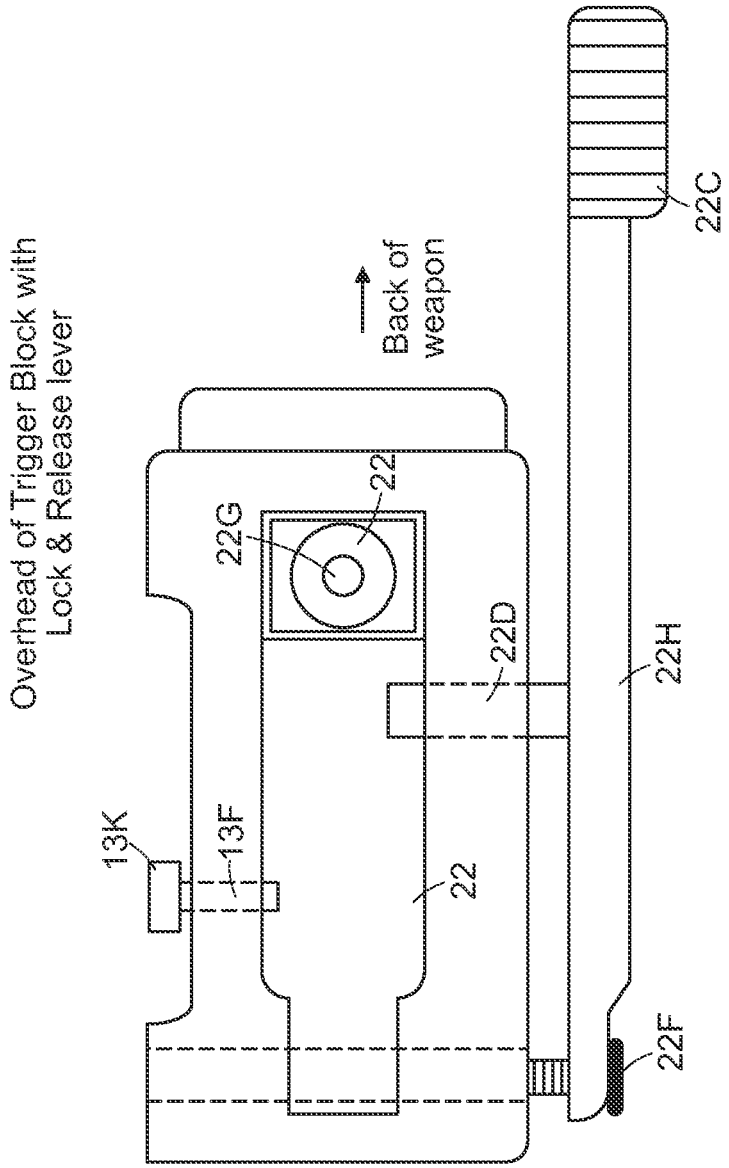
Overhead of Trigger Block with
Lock & Release lever
13K
13F
22G
22
22
22D
Back of
weapon
22C
22H
22F

FIG. 9

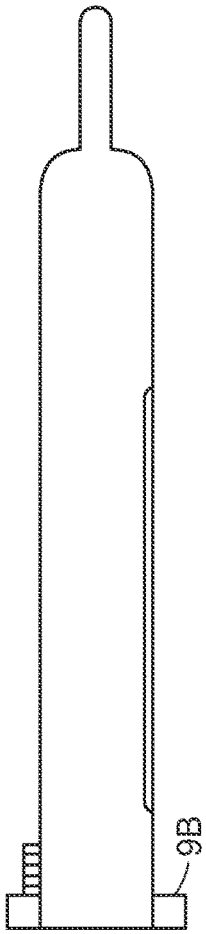

FIG. 10A

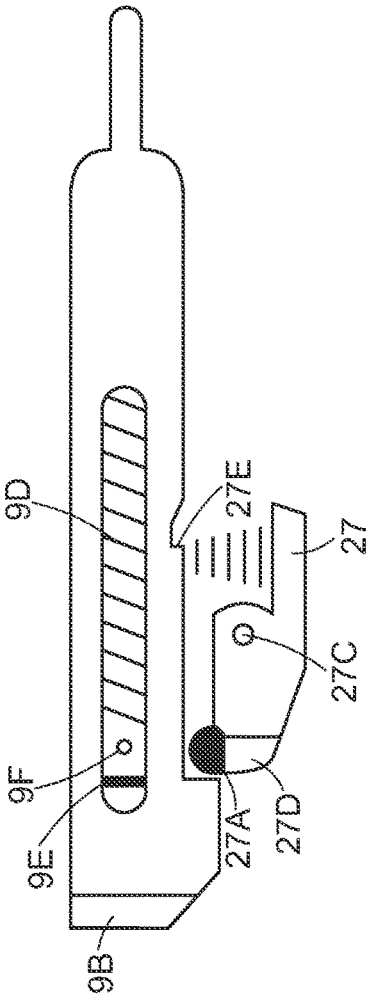

FIG. 10B

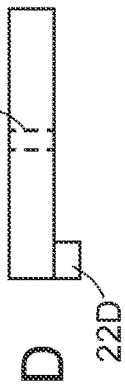

FIG. 10D

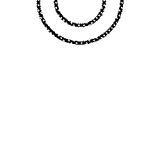

FIG. 10C

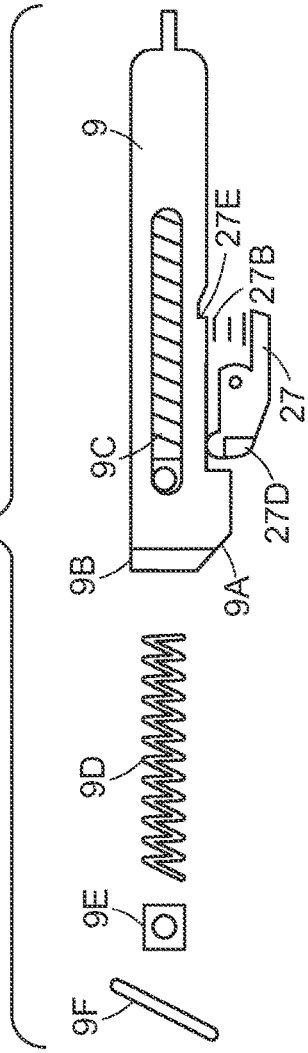

FIG. 10E

FIG. 11B

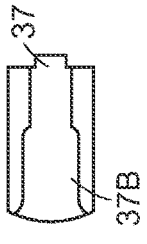

FIG. 11C

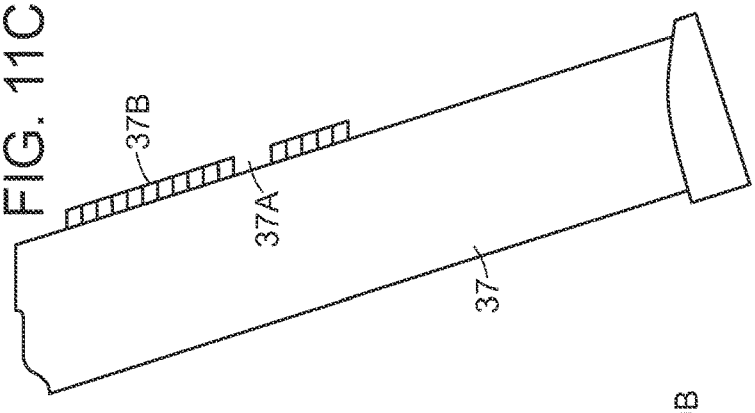

FIG. 11A

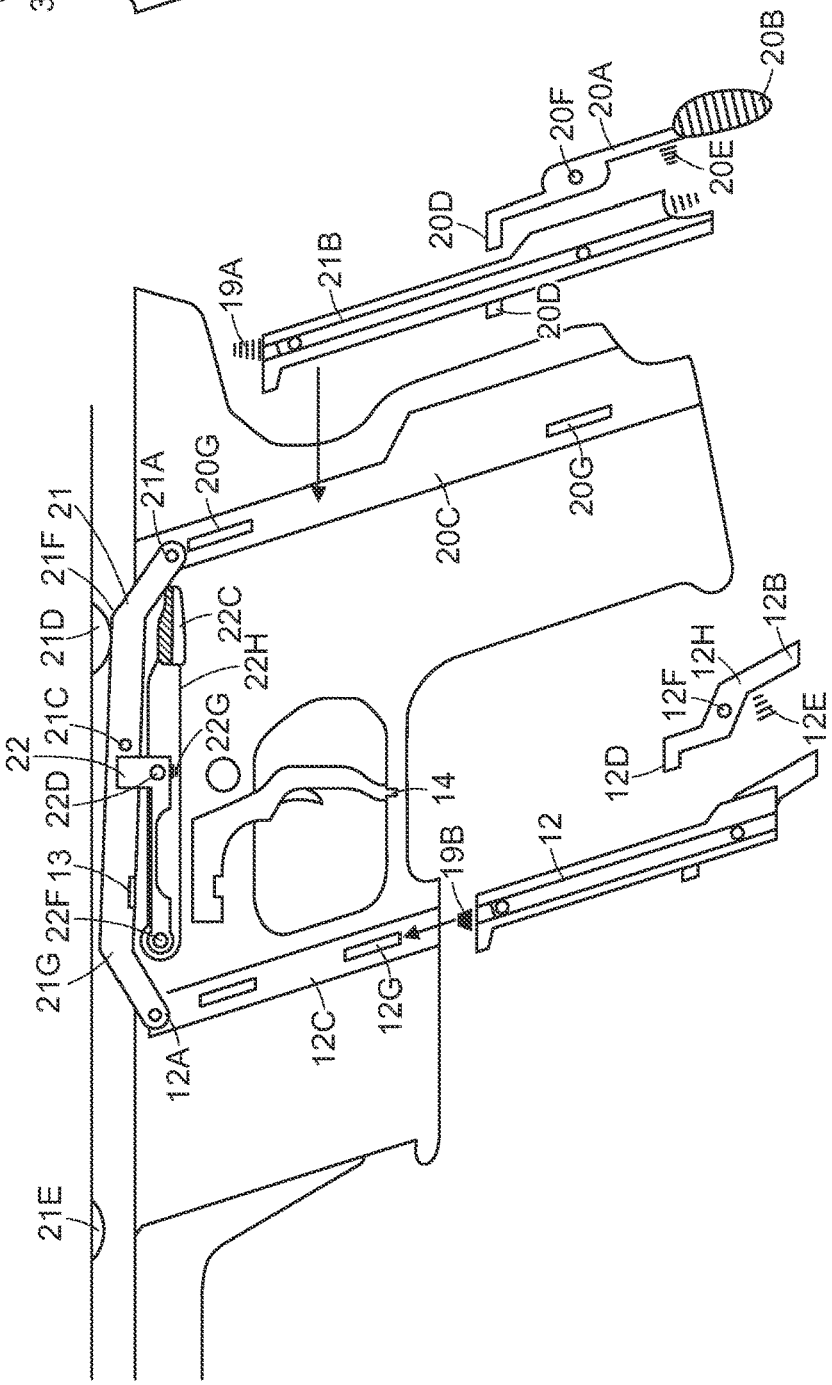

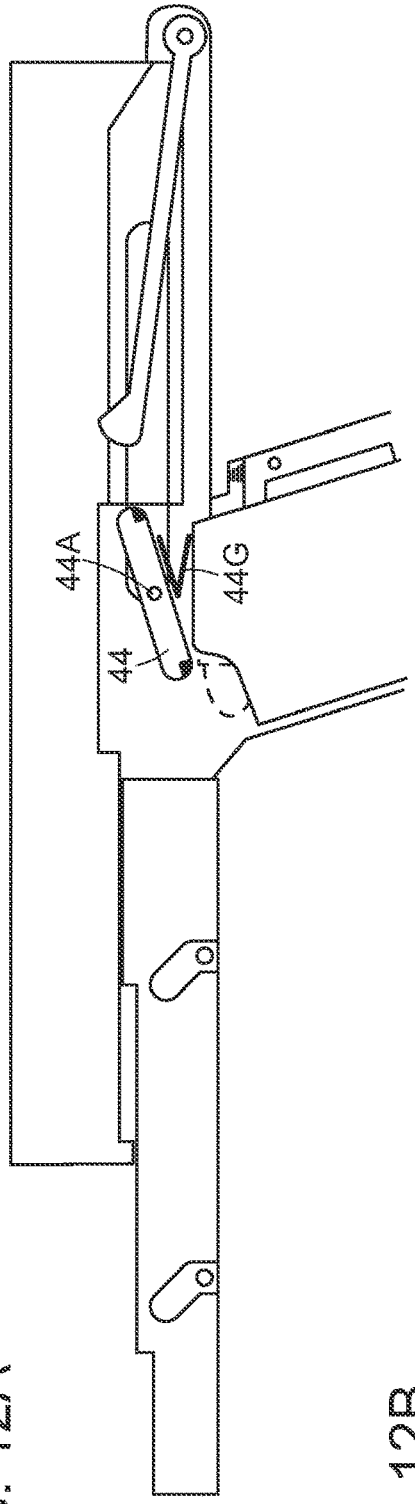

FIG. 12A

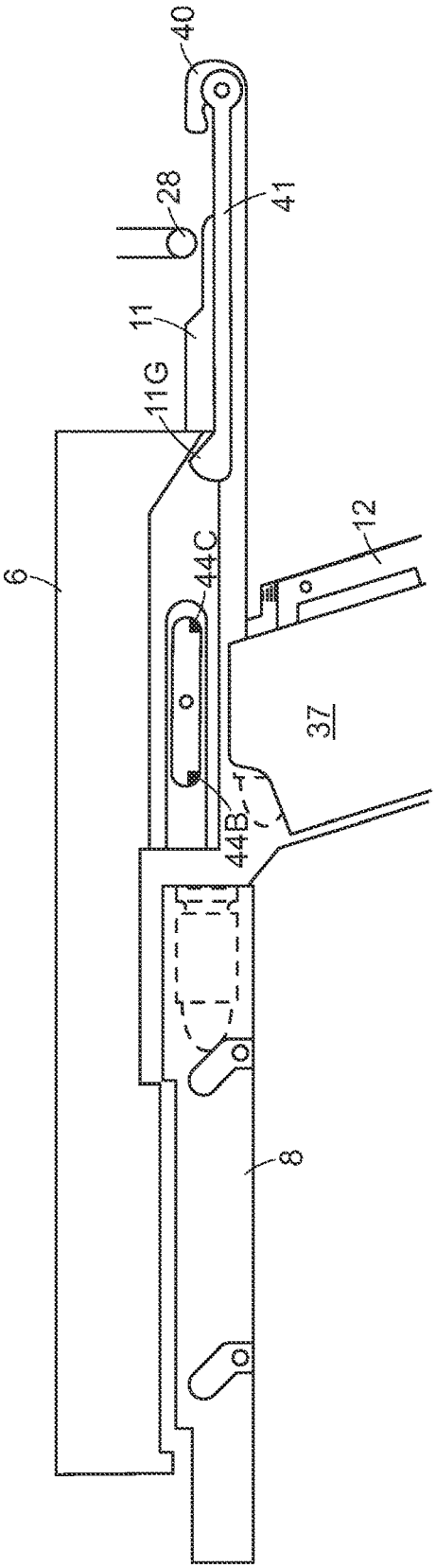

FIG. 12B

TRANSFORMER SUB-PISTOL FIREARM

FIELD OF DISCLOSURE

[0001] The present disclosure relates to firearms, and more specifically to modified submachine guns. A modified submachine gun is provided that holds a cartridge in front of the trigger ring in a traditional submachine gun position and holds and additional cartridge in the grip of the gun, behind the trigger ring. The disclosed firearm is able to fire from a submachine gun position and from a pistol position, advantageously allowing a user to hold more ammunition in the weapon and continuously fire while reloading either of the weapon's cartridges.

BACKGROUND

[0002] Submachine guns (SMGs) were developed in World War I as a smaller alternative to larger machine guns, which made them more portable and maneuverable in trench warfare. SMGs are thus characterized by their smaller size, most notably in their shorter barrel as compared to, for example, machine guns of World War I era and modern assault rifles. SMGs are referred to as carbines, i.e., long gun firearms having shorter barrels. Long guns are defined as firearms designed to be held by both hands and braced against the shoulder during fire in contrast to a handguns/pistols which can be fired when held in one hand.

[0003] While SMGs have evolved since their introduction in the early 1900s, their general structure and operation remains the same. Submachine guns (SMGs) are magazine-fed firearms capable of both semi-automatic and automatic firing. Rounds in SMGs are fired from a single magazine positioned in front of the trigger ring. SMGs are designed to shoot pistol magazines. Pistol magazines are magazines traditionally used with handguns are thus fire smaller caliber bullets than, for example, assault rifles. Pistols typically fire these smaller projectiles at lower velocities than assault and other larger rifles. For these reasons, SMGs are often used by military special forces and police SWAT teams in close quarter combat because SMGs, in contrast to assault and larger rifles, are easier to control due to their smaller size and calibers are less likely to over-penetrate intended targets.

[0004] The long gun construction of SMGs paired with the fact that SMGs fire pistol cartridges presents a unique opportunity to introduce more ammunition and firing power into the weapon. The grip of SMGs located behind the trigger ring resembles the construction of traditional handguns. This grip could be used to hold a second magazine. However, reloading an SMG magazine with a second magazine without being able to continue fire, regardless of where it is held, wastes essential time. Thus, there exists a need for a modified SMG than can transition from SMG mode to pistol mode and fire from a magazine stored in the grip of the SMG. This configuration would advantageously allow reloading of the SMG cartridge while firing from the grip cartridge, thus enabling reload without having to cease fire.

SUMMARY OF INVENTION

[0005] The subject matter of this application may involve, in some cases, interrelated products, alternative solutions to a particular problem, and/or a plurality of different uses of a single system or article.

[0006] In one aspect, a firearm is provided. The firearm is formed of a lower receiver and an upper receiver which is connected to the lower receiver and slideably movable relative to the lower receiver. A magazine well is defined by the lower receiver and a first magazine is held therein. A pistol grip on the lower receiver defines an opening which houses a second magazine. The upper receiver is movable between a submachine gun firing mode having the upper receiver engaged with and capable of firing from the first magazine, to a pistol mode having the upper receiver engaged with and capable of firing from the second magazine.

BRIEF DESCRIPTION OF THE DRAWINGS

[0007] FIG. **1** provides an elevation view of an embodiment of the firearm disclosed herein.

[0008] FIG. **2** provides a cutaway view of an embodiment of the firearm in a submachine gun mode.

[0009] FIG. **3** provides a cutaway view of an embodiment of the firearm in a pistol mode.

[0010] FIG. **4**A provides an elevation view of an embodiment of the firearm in a submachine gun mode.

[0011] FIG. **4**B provides an elevation view of an embodiment of the firearm in a pistol mode.

[0012] FIG. **5**A provides an elevation view of an embodiment of an upper receiver of the firearm.

[0013] FIG. **5**B provides a cutaway view of an embodiment of an upper receiver of the firearm.

[0014] FIG. **5**C provides an elevation view of an embodiment of a lower receiver of the firearm.

[0015] FIG. **6**A provides an elevation view of an embodiment of a top of a barrel of the firearm.

[0016] FIG. **6**B provides a side view of an embodiment of a top of a barrel of the firearm.

[0017] FIG. **6**C provides partial cutaway view of an embodiment of an inner upper receiver of the firearm.

[0018] FIG. **6**D provides front view of an embodiment of the barrel and inner upper receiver of the firearm.

[0019] FIG. **6**E provides a bottom view of an embodiment of the inner upper receiver of the firearm.

[0020] FIG. **6**F provides a front-view of the bolt an embodiment of inner upper receiver components.

[0021] FIG. **6**G provides a side view of an embodiment of the outer upper receiver.

[0022] FIG. **6**H provides a rear view of an embodiment of the outer upper receiver.

[0023] FIG. **61** provides a side view of an embodiment of the bolt of the firearm.

[0024] FIG. **6**J provides a rear view of an embodiment of the bolt of the firearm.

[0025] FIG. **7**A provides an overhead view of an embodiment of the lower receiver.

[0026] FIG. **7**B provides an overhead cutaway view of an embodiment of the upper receiver.

[0027] FIG. **7**C provides an overhead view of trigger housing an embodiment of the lower receiver.

[0028] FIG. **8**A provides side view of an embodiment of the striker and trigger assembly.

[0029] FIG. **8**B provides an exploded view of an embodiment of the striker and trigger assembly.

[0030] FIG. **8**C provides a view of an embodiment of the trigger.

[0031] FIG. **8**D provides an exploded view of an embodiment of a trigger cocking assembly and mechanism.

[0032] FIG. **8**E provides a view of an embodiment of the selector switch to change modes.

[0033] FIG. **9** provides an elevation view of an embodiment of the upper receiver with a locking/release lever and cylinder.

[0034] FIG. **10**A provides a top view of an embodiment of the striker.

[0035] FIG. **10**B provides a side view of an embodiment of the striker with safety sear mechanism.

[0036] FIG. **10**C provides a front view of an embodiment of the striker.

[0037] FIG. **10**D provides an overhead view of an embodiment of the safety sear.

[0038] FIG. **10**E provides an exploded view of an embodiment of the striker.

[0039] FIG. **11**A provides a left hand view of an embodiment of the lower receiver showing an embodiment of the see saw lever and magazine operating rods.

[0040] FIG. **11**B provides a top view of an embodiment of the magazine.

[0041] FIG. **11**C provides a side view of an embodiment of the magazine.

[0042] FIG. **12**A provides a side view of an embodiment firearm showing operation of a bolt lock lever.

[0043] FIG. **129** provides a side view of an embodiment firearm showing operation of a bolt lock lever.

DETAILED DESCRIPTION

[0044] The presently disclosed firearm advantageously makes use of the both sub-machine gun and pistol firing configurations to provide a carbine firearm that transforms from a submachine gun firing mode to a pistol firing mode, and is able to fire a projectile from a first magazine in a submachine gun configuration and is also able to fire a projectile from second magazine in a pistol configuration. The disclosed firearm is thus referred to herein as a "transformer sub-pistol." In some embodiments, the barrel of the disclosed transformer sub-pistol has a maximum length of 5.5 inches. In some embodiments, the total weapon length is a maximum of **13** inches. This compact size is advantageous for use in close combat.

[0045] The presently disclosed firearm makes use of many features standard to semi-automatic pistols and submachine guns, and thus, prior to discussing the mechanics of the transformer sub-pistol, a brief discussion of the manner in which a semiautomatic weapon is fired is first discussed herein.

[0046] The key components of semiautomatic firearms, including pistols and SMGs, that are responsible for the weapon's ability to fire are contained within the receiver. The receiver, as the name suggests, receives ammunition. The receiver houses the weapon's internal components, including the hammer, action, and firing mechanism. The receiver of semiautomatic pistols, for example, includes a frame having a set of rails. A slide is mounted on a set of rails and can freely move backwards and forwards along the frame. The barrel of the firearm, the portion of the weapon which receives and ejects a projectile, can be attached to the frame, in which case the slide is located to the rear of the barrel, or, in other designs, the barrel can be mounted within the slide. The slide further houses a firing pin/striker, depending on the weapon, and extractor. The firing pin is involved in the firing mechanism and the extractor discards used cartridges after they have been fired. The extractor dispenses spent cartridges from the chamber via an ejection port on the receiver. Semi-automatic pistols may utilize an external hammer, internal hammer, or a spring-loaded striker or firing pin.

[0047] When the semiautomatic weapon, e.g., a pistol, is first loaded by inserting a magazine containing cartridges into the magazine well, no cartridges enter the chamber and the weapon is not ready to fire. Cartridges are cases that contain a bullet, propellant, and an ignition device. It will be appreciated by those of skill in the art that a bullet refers to only the projectile that leaves the barrel of the firearm, and cartridges, also used interchangeably with rounds, are the pre-assembled ammunition loaded into magazines. Magazines used in semi-automatic weapons are unique in that they are spring-loaded. A tension spring applies pressure to the ammunition in the magazine in an upwards direction towards the barrel of the firearm. The pressure applied by the magazine spring slides the next available cartridge across the breech and into the chamber when the slide is pulled backward. The same pressure is applied to the next cartridge in the magazine when the gun is fired, thereby loading next cartridge into the chamber.

[0048] To load a round into the chamber, the slide must be appropriately engaged by being pulled back, allowing the ammunition in the spring-loaded magazine to enter the chamber, i.e., to be inserted into the firing position. When the trigger is pulled, the firing pin is struck by the hammer (or the striker pin is released, depending on the specific design of the weapon) which in turn strikes the primer cap on the cartridge. The primer ignites the propellant in the cartridge which then causes the rapid buildup of gas within a small volume. This rapid increase in pressure ultimately propels the bullet from the barrel of the gun at a high velocity. After the bullet has left the barrel, the released gasses from the propellant force the slide (and a breechblock) rearward, which in turn cocks the hammer for the next round. During this process, the ejector pin grabs the spent shell and ejects it via the ejection port. The magazine, via its internal spring, replaces the spent cartridge with a fresh round as the slide returns to its original resting position. The trigger is reset to the firing position, allowing the shooter to continue firing rounds.

[0049] There are three main types of semiautomatic pistols, blowback action pistols, recoil action pistols, and gas operation action pistols. Each type of action is designed to confine the high-pressure gasses from the propellant to certain parts of the firearm to both prevent damage to the firearm and ensure shooter safety by ensuring that the breech is not opened until pressure within the weapon has dropped to safe levels, which is accomplished by closing the breech for a certain amount of time during action.

[0050] Gas-operated actions pistols are used when the pressure in the chamber resulting from the ignition of a cartridge's propellant is high enough that the opening of the breech would occur too rapidly with simple or delayed blowback. In such weapons, the breechblock is "locked" into the barrel, referred to as a locked-breech design. In a locked-breech design, the slide contained the slide/breechblock. At the point of firing, the inertia pushes the barrel and slide/breechblock backwards together for a certain distance. This type of action utilizes the combined weight of the slide/breech and barrel so that its inertia prevents movement from occurring too quickly, and this type of action, with respect to the breech, may be referred to as "floating action". The breech locking mechanism is designed to disengage

after the slide/breech has traveled a certain distance, which ensures the pressure within the weapon has dropped to safe levels.

[0051] In accordance with aspects and embodiments, the transformer sub-pistol is a delayed blowback firearm. However, the disclosed transformer sub-pistol may be modified to operate via gas operated or recoil action, and such design modifications will be readily ascertained by those of skill in the art.

[0052] In accordance with aspects and embodiments, the disclosed transformer sub-pistol comprises an upper receiver **100** that travels horizontally along a lower receiver in between a first magazine positioned in a submachine gun firing configuration and second magazine positioned at the grip of a traditional SMG, and, positioned in a pistol firing configuration. The upper receiver includes an upper receiver housing and upper receiver. The upper receiver contains all the parts necessary to discharge at least one round manually loaded into the chamber. The upper receiver housing encloses the inner upper receiver and contains a single magazine port, which may alternatively be referred to herein as a magazine well, and a feed ramp. The upper inner receiver and the upper receiver housing are fixed to one another by a locking pin and further pinned to one another and the lower receiver by a pivot pin.

[0053] The lower receiver **200** contains both magazines, a trigger group (trigger assembly), and a trigger that is connected to the upper receiver via a detachable lever. The lower receiver is pinned to the upper receiver by a pivot pin and is held in place by a slide port. The slide port has an open top that allows the upper receiver to pass through the port and the configuration of the lower receiver facilitates smooth sliding from the first magazine to the second magazine and vice versa.

[0054] Most known submachine guns are fired from a single magazine positioned in front of the trigger ring, leaving the weapon with an empty pistol grip that could potentially use a second magazine that could be activated by a push of a knob. This would allow the user to carry more loaded ammunition without changing the overall shape of the weapon. In addition, the firearm may operate as a hybrid submachine gun that could theoretically be operated as a pistol, hence the term "Transformer Sub-Pistol". The advantage of this firearm is that a user can reload one magazine while still having access to a loaded magazine reserved to fire at the user's discretion.

[0055] Turning to the figures, the operation behind this invention is a mechanism that will allow a part known as an upper receiver to travel forward and backward or from magazine one **300** (SMG mode) to magazine two **400** (Pistol mode) on a part known as the lower receiver. The typical interchangeable transformer subpistol magazine is made up of a catch slot **37**A and a ridge **37**B which forms the catch slot and acts as a guide for both magazines. The weapon is designed with a conventional butt stock **42** which can be extended manually or automatically when the weapon moves from position on to two. Butt stock **42** is held in place by a catch **43** which can be released manually by the user or automatically when the weapon changes position. A finger guard **33** and hand guard **33**A is designed to keep the user safe during operation. Finger guard **33** prevents the user from accidentally putting their support hand finger in front of the barrel and hand guard **33**A protects the user's support hand when the weapon is moved between position one and two.

[0056] This weapon can be separated into three parts, the part known as the upper receiver can be divided into two section: outer upper receiver housing and inner upper receiver housing. The next portion is the lower receiver. Both upper and lower receiver are connected at the front of the weapon at **25**A and held in place by the pivot pin **25**. The inner upper receiver contains most of the major parts such as bolt, barrel, striker, recoil spring, ejector, extractor, sears, trigger operating rod and disconnectors. The outer upper receiver is made mainly to enclose the inner upper receiver and contains a single magazine opening **37** and a feed ramp **38**A-C. Both inner upper receiver is pinned at pivot pin **25** after it is slid through upper receiver slide port **3**D. The inner upper receiver is locked to the outer upper receiver at upper receiver lock pin **3**B. The retainer plate **5** is used to hold the recoil rod **3** and recoil spring **4** in place while recoil spring stop ridge **3**A is used to stop recoil spring **4** from touching the recoil and ejector rod retaining plate **5**. Upper receiver lock pin **3**B is depressed until it slides through receiver locking well **3**C and this acts as a lock for the outer and inner upper receiver. The upper receiver contains all the moving parts and functions to conventionally allow discharge of at least one round if manually loaded in the chamber. The lower receiver contains both magazine and a trigger that is connected to the upper receiver via a detachable lever. It also has both magazine, trigger group, locking/release cylinder retract spring and guide rail. The lower receiver is pinned to the upper receiver at pivot pin **25** and is held in place at upper receiver slide port **3**D. Upper receiver slide port **3**D has an open top that allows the upper receiver to pass through as the top is open, however the sides are designed for holding the upper receiver and also allowing smooth sliding from one magazine to the next.

[0057] The weapon is designed with an ambidextrous charging angle **7** built into a detachable system which includes sights **1**, **2**, and picatinny rails **7**A that is mounted on top of the inner upper receiver. Element **7** is a part of a detachable ambidextrous charging system **36** which can be removed from the upper receiver. Ambidextrous charging attachment **36** houses the charging angle **7** and the picatinny rail system **7**A. Ambidextrous charging attachment **36** is slid under a dove tail style lock at dovetail groove **30** and is pinned at the charging angle housing pin **31**. A groove is left in the inner receiver shown at the charging angle connection slot **35** to charging angle contact ridge **35**A to engage bolt **6** when charging the weapon. The charging angle is activated by making contact with the charging angle locking system **29**A which is a safety lock which prevents accidental charging, reciprocation of the bolt with the charging angle and can also use to lock the bold open for inspection. It is found in a finger ring looking area on ambidextrous charging attachment **36**. When locking system **29**A is activated the user is able to manually charge the weapon using a finger. Disconnecter contact point **29**A is kept in place by a spring **29**B which keeps locking trigger **29**A in the correct position at all time. When the weapon is being charged or during the bolt cycle after the weapon is discharged, the barrel S is held inside the upper receiver at barrel delay locking groove SD by barrel camel dowel **8**C. The bolt **6** and barrel S are designed to cycle backwards but are prohibited to do for a small amount of time due to a delayed locking system which

holds the bolt **6** and barrel **6** together until the bullet exits the chamber, thus resulting in a drop in pressure. After the pressure drops, the barrel S and bolt **6** travel backwards for about 1 cm before the barrel falls somewhat vertically downwards due to the barrel camel dowel **8**C which allows the barrel feed ramp **8**F to make contact with upper receiver feed ramp **38** to feed a round in the chamber when bolt **6** cycles forward. The bolt **6** continues its cycle backwards, compressing the recoil spring **4** which forces the bolt **6** forward at the end of the backwards cycle. In returning, the bolt **6** pushes the barrel **8** back in place and holds it there until the bolt **6** cycles again and loads a round into the chamber. For stability, barrel **8** is depressed at the barrel front delay lock **8**A and **8**B to match the bolt charging slot **6**A and bolt catch point **6**B. This design significantly aids in the balance of the weapon when an add-on is used. Ejector rod **26** and extractor **26**A are used to remove the shell casing from the chamber when the breech opens at ejection port **32**.

[0058] FIG. **1** displays the weapon in its normal firing position when magazine one is activated. As shown in the figures, the function is feasible via receiver locking/release cylinder **22**. Receiver locking/release cylinder **22** locks the upper receiver to the lower receiver in position one (to fire magazine one—i.e. the SMG mode) via receiver locking slot one **22**A. Upper receiver magazine well **37** is now directly in line with lower receiver magazine well one **37**D. Magazine one is now forced upwards into its feeding position. The upper receiver see saw lever **21** is positioned such that see saw rod **21**D now rests directly on see saw rod suppression face **21**F forcing it downwards while lifting the opposite end. The see saw lever **21** is pinned in the center at pivot point pin **21**C which allows it to operate like a see saw when a force is applied. This movement forces magazine one operating block **12** upwards because it is pinned to the see saw lever **21** at connection **12**A. At magazine one catch **12**D the magazine is also forced upwards into the upper receiver magazine well **37** because each magazine sits in a magazine catch slot at **37**A. The upward movement caused by see saw lever **21** then transfers to magazine one operating block **12** which is reciprocated by magazine one catch **12**D which pulls the magazine upwards into position for tiring. Magazine one operating block **12** sits in a guide way **12**C via magazine operating bar guide rail **12**G. This allows the magazine one operating block **12** to move up and down to activate the magazine or decommission the magazine. When magazine one is in firing mode spring **19**B is in compression. The magazine can be released by pressing magazine one release button **12**B. The magazine catch lever **12**H is pinned at catch pin **12**F. A magazine catch spring **12**E is responsible for keeping the magazine one catch **1213** in magazine catch slot **37**A when the magazine is in the well.

[0059] FIG. **2** shows the gun in 'SMG' mode where the gun is being fired from the magazine positioned in front of the pistol ring ("magazine one"). FIG. **3** shows the gun in 'pistol mode' when the gun is being fired from the magazine in the pistol grip ("magazine two"). Movement between SMG and pistol mode is activated by pressing the receiver lock/release lever end **22**C downwards. Element **22**, the receiver locking/release cylinder has a cylinder at one end and pivots at the other end at connection point **22**F. The receiver lock/release lever **22**H is pinned at a pivot point to the side of the weapon at **22**F. Pivot point **22**F is a screwed at one end with a round shaft that goes through the hole which allows it to pivot downwards. A spring **22**G keeps the cylinder upwards at all time locking the upper receiver to the lower receiver at locking slot **22**A or **22**B depending on the configuration. When the receiver lock/release lever **22**C is pressed it releases the receiver locking/release cylinder **22** from slot **22**A and the upper receive slides backwards on rails formed at guide way **24** on the lower receiver and support handgrip **34** on the upper receiver. A clock spring **23** which is in tension when the gun is in SMG mode in FIG. **2** urges the upper receiver into the pistol mode position. Clock spring **23** is pinned to the upper receiver at connection point **23**A. When receiver locking/release cylinder **22** is released, spring **23** recoils by retract spring cable **23**B recoiling into spring **23** at the same time pulling the upper receiver backwards because it is pinned to the upper receiver at connection point **23**A until the weapon takes the form as shown in FIG. **3** and FIG. **4**B which is the "pistol mode." After receiver lock/release lever end **22**C is pressed downwards, connection point **22**D which is fixed to the receiver lock/release lever **22**H is moved downwards while pivoting at pivot point **22**F. While the pin **22**D which is fixed to receiver lock/release lever **22**H moves downwards because it is hovering over the receiver locking/release cylinder **22**, as it moves downwards it causes cylinder **22** to move downwards forcing it to release from magazine two pin or block **21**A/**21**B depending on the position.

[0060] During the downward motion of the receiver locking/release cylinder **22**, trigger level depression point pin **13**F which hovers under the cylinder **22** and is fixed to the upper trigger lever **13**K at trigger level depression point pin **13**F also moves down causing upper trigger lever **13**K to collapse into pin **13**F and clearing upper trigger lever **13**K from trigger lever rod slots **11**E/**11**F allowing the upper receiver to fully disengage and transform backwards due to spring loaded tension caused by receiver retract spring **23** or to transform forward when **22**C is depressed while the upper receiver is manually pushed forward back into SMG position. Upper trigger lever **13**K then reconnects with trigger operating rod **11** at trigger lever rod slot one **11**E or trigger lever rod slot two **11**F depending on the position to assume the first or second firing position using the same trigger **14**. Simultaneously during this backward motion to pistol mode, the upper receiver see saw rod suppressor **21**D moves from point one **21**F so that upper see saw rod suppression point **21**E is directly over see saw rod suppression point two **21**G causing spring **19**B to become relaxed and compression at spring **19**A. Upper receiver magazine well **37** is now positioned over lower receiver magazine well two **37**E. Because see saw lever **21** is pinned to magazine two operating block **21**B at pin **21**A magazine, engaged with the magazine two operating block **21**B, is forced up into the firing position when magazine two catch **20**D catches the magazine and at magazine catch slot **37**A. Magazine two operating block **21**B operates and contact the magazine two guide way **20**C through dowels and the magazine operating bar guide rail **20**G. The pistol grip magazine (magazine two) is operated by the catch lever **20**A and can be released from the well by pressing the magazine catch release button **20**B which compresses magazine two catch spring **20**E causing magazine two catch **20**D to move backwards out of magazine catch slot **37**A. Catch lever **20**A is pinned at **20**F which allow it to pivot.

[0061] To move from position one (the 'SMG' mode as in FIG. **2**) to position two ('pistol' mode as in FIG. **3**) lever contact point **22**C is pressed. However, to move from pistol

mode, position two, to SMG mode, position one, the user depresses receiver lock/release lever contact point **22**C and also manually pushes the upper receiver forward back to position one.

[0062] The trigger of the S-T Transformer is made up of three major components, trigger **14** trigger operating lever **13** and the trigger operating rod **11**. The trigger **14** can be described as a flat or pull back trigger that runs on a rod **15**A which is tensioned by spring **15**. Both spring **15** and rod **15**A are operated in the housing **15**B which allows the trigger to move forward and backward. When pressure is applied to the trigger **14** it moves backwards, this in turn pulls **13** backwards. Lever **13** is pinned at point **13**C and the backwards movement of the trigger **14** causes it to pivot at the lever pin **13**A which is fixed to trigger **14** forcing lever **13** to move backwards. Lever **13** is connected to trigger operating rod **11** via trigger lever rod slots **11**F or **11**E depending on upper receiver position. Lever **13** is made in two portions, upper and lower. Upper trigger lever **13**K is made to move up and down freely in lower trigger lever **13**H. A spring **13**E supplies force to keep upper trigger lever **13**K upwards. The spring **13**E sits in a slot **13**G in the lower portion. **13**F is a pin that hovers under locking/release cylinder **22** that allows the upper portion to be depressed in the lower portion when **22**B pressed down allowing locking/release cylinder **22** and lower trigger lever **13**H to release the upper receiver. Upper trigger lever **13**K is depressed into pin **13**F during the backward pull of the trigger as it rotates at **13**C.

[0063] The lever **13** moves backwards and main sear **11**A contacts the striker **9** at **9**B, the striker **9** travels backwards until disconnector contact point **28**A makes contact with disconnector **28**. The disconnector **28** then suppresses trigger operating rod **11** downwards disconnecting the striker **9** while disconnector **28** travels upwards in disconnector slot **28**B which resets disconnector **28** for the next cycle. Simultaneously, safety sear disconnect two **11**C suppresses safety sear **27** thus causing striker **9** to travel fully forward, igniting a primer. The bolt **6** cycles and right before the end of this process it contacts full auto rod **41**. Full auto rod **41** acts as the disconnector when the weapon is in semi-automatic (burst) and fully automatic mode. As bolt **6** closes it makes contact at **11**G allowing trigger operating rod **11** to be disconnected from striker **9** and firing the weapon during each cycle. Trigger operating rod **11** jumps upwards due to spring tension and when the bolt cycles forward, safety sear disconnect twos **11**C catches the striker engagement surface **9**B and bolt **6** travels forward to into battery. Prior to the bolt **6** closing, it catches full auto rod **41** and moves it forward thus releasing disconnector **28** for a next cycle. The striker **9** is left cocked and ready to fire a next round. This completes the double action firing cycle.

[0064] At the first press of the trigger **14** the weapon is designed to fire from this double action mode. However, after the first press, single action mode will be automatically activated unless decommissioned by the user. In single action mode trigger **14** is held right before the breaking point where disconnector contact point **28**A contacts disconnector **28**. The cocking lever **17**A is designed to automatically move upwards due to spring tension from **17**B and holds trigger **14** in place at trigger cocking contact point **17**D. This is described as single action because when the trigger is pressed it breaks immediately and causes the weapon to discharge. This mode can be decommissioned by pressing cocking lever **17**A until it locks at trigger cocking release **16** via points **16**C. It can also be recommissioned by pressing trigger cocking release **16** at catch **16**A. Trigger cocking release **16** has a constant upward force applied by spring **16**B. The trigger **14** can also be used to cock the weapon before the weapon is fired by the push button selector switch **14**A to the safety mode **14**B. At this point trigger **14** will be blocked right before the breaking point of the weapon which will activate the cocking lever **17**A to hold trigger **14** right before the breaking point. When safety **14**B is decommissioned the weapon will remain in single action mode unless it is decommissioned by the user by pressing trigger cocking release **16** at **16**A.

[0065] Another feature of the disclosed invention is the trigger lock safety **17**, which is made to manually lock trigger **14** when it is at rest at the user desires. Trigger lock safety **17** locks in place at trigger locking slot **15**C and can be decommissioned by once again pressing trigger lock safety **17** forward it until it makes contact with trigger cocking release **16** at contact point **16**C. Both trigger lock safety **17** and cocking lever **17**A are pinned together by trigger cocking lever pin **17**C. Trigger lock safety **17** is positioned inside of cocking lever **17**A, however both features operate independent of each other. Both features are also decommissioned and recommissioned by the same trigger cocking release **16**, independent of each other. Trigger lock safety and cocking lever **17**,**17**A and trigger cocking release **16** are all designed to fall within the trigger ring which gives the user ease of operation and ambidextrousness. Another safety feature is controlled by push button selector switch **14**A. **14**A has three different options, first position is safety **14**B, second position is semi auto **14**C and third is fully auto **14**D. This feature blocks or stops the trigger **14** from traveling further than the user intends it to. Thus the trigger **14** can be locked for safety or the weapon can be made to fire in full auto by allowing trigger **14** to travel backwards in that depression.

[0066] The firearm disclosed herein is designed with a safety feature mainly for decoking the weapon when in single action mode. It also prevents accidental discharge when the weapon is being transformed or moved between position one to position two when receiver lock/release lever **22**C is pressed. The safety sear **27** is pinned inside the bolt directly below the striker **9** at the end of the bolt **6**. The striker **9** is made up of a spring **9**D that sits in a channel inside the striker **9**C this **9**D is designed to generate enough kinetic energy to discharge a conventional round. **9**D is held inside the striker by a retainer plate **9**E. Retainer plate **9**E is pinned to the bolt **6** through pin **9**F that sits in a channel inside the bolt **6** at striker retainer pin housing **10**. Safety sear **27** is pinned to the bolt at **27**C and is under constant spring tension from sear spring **27**B. The safety sear disconnect **11**C makes contact with sear disengagement lip **27**D causing safety sear **27** to be depressed. The disengagement contact surface **27**A is fully depressed thus releasing safety sear **27** from cocking notch **27**E and also depresses safety sear **27** enough to clear the lip at safety stopping lip **9**A. At the same time, disconnector **28** is making contact with **28**A which releases striker **9** thus allowing the striker **9** to move fully forward, contacting the primer in the bullet.

[0067] The safety feature is also relevant when the weapon is being decocked or being taken out of single action mode. During this action, sear disengagement contact surface **27**A is positioned inside cocking notch **27**E and cocking lever **17**A is positioned at trigger cocking contact point **17**D thus

holding the pun cocked or in single action mode. If the user wishes to decommission single mode or uncock the weapon, first cocking lever **17**A has to be pressed to make contact with trigger cocking release **16**, releasing it from trigger cocking contact point **17**D, and thus moving trigger **14** forward automatically. Because trigger **14** is connected to trigger operating lever **13**, and trigger operating lever is **13** connected to trigger operating rod **11** at **11**E or **11**F, when trigger **14** is uncocked, trigger operating rod **11** rooves forward. During this forward motion, decocking, disconnect one **11**B is designed to make contact with disengagement contact surface **27**A thus releasing it enough to clear cocking notch **27**E. Striker **9** starts moving forward back to its resting position inside of bolt **6**. This is the same action that the striker **9** does before the weapon is discharged however it is blocked from contacting the primer via safety stopping lip **9**A that makes contact with safety sear **27** at disengagement contact surface **27**A a few millimeters prior to contacting the primer, and thus the weapon will not be discharged. Only safety sear disconnect two **11**C creates enough downwards movement in safety sear **27** to fully clear the way of the striker **9** to discharge the weapon and this is only possible when disengagement contact surface **27**A makes contact with cocking notch **27**E and disconnector contact point **28**A meets disconnector **28**, or if trigger **14** is squeezed to breaking point. This feature works in the same way when the weapon is cocked and is being transformed between position one and position two hence preventing accidental discharge.

[0068] The weapon is also designed to fire in semi-automatic mode and full automatic mode using the selector switch **39** which allows the trigger to move further backwards thus allowing operating lever **13** to engage full auto sear **40**.

[0069] The bolt locking system is used to hold the bolt open when one magazine is fired until it is empty or when it is released from the magazine well. Bolt lock lever **44** is positioned on the outside in a. slot of the upper inner receiver and protrudes inside the weapon at bolt locking magazine contact point **44**B and bolt catch point **44**C. Bolt locking magazine contact point **44**B is designed to contact the magazine and levels out bolt lever lock **44** which is spring tensioned through **44**G which constantly positions the lever to catch the bolt **6** at bolt catch point **6**B. Bolt lock lever **44** is also pined at bolt lock pin **44**A which allows bolt lever lock **44** to pivot upwards and downwards. Hence when the magazine is released or the magazine is fired until empty, the follower protrudes at the top of the magazine and makes contact with bolt lock lever **44** at bolt locking magazine contact point **44**B. When the magazine is released, bolt lock lever **44** takes control of holding the bolt **6** because it is constantly under spring tension from bolt lever spring **44**G forcing bolt catch point **44**C to make contact with catch point **6**B. When a loaded magazine is loaded into the magazine well, it makes contact with bolt lock lever **44** at contact point **44**B and levels the lever **44** thus allowing the bolt **6** to move forward, chambering a round. This is the auto chamber feature of the weapon. Also, if any of the two magazines are fired until empty, the follower holds the bolt open. However whenever receiver locking/release cylinder **22** is pressed and the weapon transforms into pistol mode, bolt lock lever **44** takes control of holding the bolt open because magazine one is dragged out of the well. Due to the operation of see saw lever **21** and magazine one operating block **12**, when magazine two is loaded, it will now be forced into the upper magazine well **37** thus suppressing bolt lock magazine contact point **44**B once again allowing the bolt **6** to move forward and automatically loading a round. This feature is auto chambering between position one and two. The bolt **6** is designed to automatically remain open to auto chamber a round, however this feature can be manually decommissioned by pressing the bolt release lock **44**F which closes the bolt preventing auto chambering. This levels out the lever allowing the bolt to close. The weapon can then be loaded on a closed bolt without auto chambering a round. This feature works like a slide release knob on a typical hand gun when the slide is cocked.

[0070] In one embodiment, the barrel is designed to be a max length of 5.5 inches with a total weapon length of 13 inches. Of course, these sizes may vary depending on embodiment.

[0071] A list of the transformer sub-pistol parts as discussed herein is provided in Table 1 below:

TABLE 1

1	Front sight
2	Rear sight
3	Recoil rod
3A.	Recoil spring stop ridge
3B.	Upper receiver lock pin
3C	Receiver locking well
3D	Upper receiver slide port
4	Recoil spring
5	Recoil and ejector rod retaining plate
6	Bolt
6A	Bolt Charging Slot
6B	Bolt Catch point
7	Ambidextrous Charging angle
7A	Detachable charging attachment/ Picatinny rail system
8	Barrel
8A/B	Barrel front delay locking system
8C	Barrel camel dowel
8D	Barrel delay locking grove
8F	Barrel feed ramp
9	Striker
9A	Safety stopping lip
9B	Striker/operating rod engagement surface
9C	Striker spring channel
9D	striker spring
9E	Striker spring retainer
9F	Spring retaining pin
10	Striker retainer pin housing
11	Trigger operating rod
11A	Main Sear
11B	Decocking/Safety sear Disconnect 1
11C	Safety sear disconnect 2
11E	Trigger lever rod slot 1
11F	Trigger lever rod slot 2
11G	Auto Sear Contact point
12	Magazine 1 operating block
12A	Mag 1 seesaw connection lever/Mag 2 operating block
12B	Mag 1 catch release button
12C	Mag 1 guide way
12D	Magazine 1 catch
12E	Magazine 1 catch spring
12F	Magazine 1 catch pin
12G	Magazine 1 operating bar guide rail
12H	Magazine 1 catch contact
13	Trigger operating leaver
13A	Trigger lever pin
13C	Trigger lever pivot point
13E	Trigger lever spring
13F	Trigger lever depression pin point
13G	Trigger lever depression slot
13H	Lower Trigger lever

TABLE 1-continued

13K	Upper trigger lever
14	Trigger
14A	Push button selector switch
14B	Push button selector switch safety position
14C	Push button selector switch semi-automatic position
14D	Push button selector switch fully automatic position
15	Trigger spring
15A	Trigger Spring guide rod
15C	Trigger locking slot
16	Trigger/trigger cocking release
16A	Trigger locking/cocking catch
16B	Trigger lock spring
16C	Trigger locking/trigger cocking contact point
17	Trigger lock safety
17A	Cocking lever
17B	Trigger locking/cocking spring
17C	Trigger dead lock lever/cocking lever pin
17D	Trigger cocking contact point
19A	Magazine 2 operating block spring
19B	Magazine 1 operating block spring
20A	Magazine 2 catch lever
20B	Magazine 2 catch release button
20C	Magazine 2 guide way
20D	Magazine 2 catch
20E	Magazine 2 catch spring
20F	Magazine 2 catch pin
20G	Magazine operating bar guide rail
21	Magazine see saw lever
21A	Magazine 2 seesaw connecting lever/ magazine operating block pin
21B	Magazine 2 operating block
21C	See saw pivot pin
21D	Upper receiver see saw rod suppressor 1
21E	Upper receiver see saw rod suppressor 2
21F	See saw rod suppression point 1
21G	See saw rod suppression point 2
22	Receiver locking/release cylinder
22A	Receiver locking slot 1
22B	Receiver locking slot 2
22C	Receiver lock/release lever contact point
22D	Lever and cylinder connection point
22F	Receiver lock/release lever pivot point
22G	Cylinder spring
22H	Receiver lock/release lever
23	Receiver retract spring
23A	Retract spring connection point
23B	Retract spring cable
24	Receiver guide way
25	Receiver pivot pin
25A	Receiver pivot block
26	Ejector rod
26A	extractor
27	Safety Sear
27A	Sear disengagement contact surface
27B	Sear spring
27C	Safety sear pin
27D	Sear disengagement lip X
27E	Cocking notch
28	Disconnector
28A	Disconnector contact point
28B	Disconnector slot
29A	Charging angle non-reciprocating locking trigger
29B	Charging angle spring
30	Dovetail grove
31	Charging angle housing and pin
32	Ejection port/Breech
33	Finger Guard
33A	Hand guard with guide rail
34	Forward handgrip
35	Charging angle connection slot
35A	Charging angle contact ridge

TABLE 1-continued

36	Ambidextrous charging attachment
37	upper receiver Magazine well
37A	magazine catch slot
37B	Magazine ridge
37D	Lower receiver magazine well 1
37E	Lower receiver magazine well 2
38A	Upper receiver feed ramp indent
38B	Lower receiver feed ramp indent 1
38C	Lower receiver feed ramp indent 2
40	Full Auto Sear
41	Full auto rod
42	Butt Stock
43	Butt Stock catch
44	Bolt lock lever
44A	Bolt lock pin/pin point
44B	Bolt lock mag contact point
44C	Bolt catch point
44F	Manual Bolt lock release
44G	Bolt lever spring.
100	Upper Receiver
200	Lower Receiver
300	Magazine One
400	Magazine Two

[0072] While several variations of the present disclosure have been illustrated by way of example in preferred or particular embodiments, it is apparent that further embodiments could be developed within the spirit and scope of the present disclosure, or the novel concept thereof. However, it is to be expressly understood that such modifications and adaptations are within the spirit and scope of the present disclosure, and are inclusive, but not limited to the following appended claims as set forth.

What is claimed is:

1. A firearm comprising:

a lower receiver;

an upper receiver, the upper receiver connected to the lower receiver;

a first magazine well defined by the lower receiver; and

a pistol grip on the lower receiver.

2. The firearm of claim **1** wherein the upper receiver is movable relative to the lower receiver.

3. The firearm of claim **1** wherein the upper receiver is slidable relative to the lower receiver.

4. The firearm of claim **1** wherein a first magazine is held within the first magazine well.

5. The firearm of claim **4** wherein the upper receiver is engaged with and capable of firing from the first magazine.

6. The firearm of claim **4** wherein the first magazine is engaged with a first magazine operating block.

7. The firearm of claim **6** wherein the first magazine operating block is movable between an engaged and disengaged position.

8. The firearm of claim **1** wherein the pistol grip defines a second magazine well.

9. The firearm of claim **8** wherein the second magazine well houses a second magazine.

10. The firearm of claim **9** wherein the upper receiver is engaged with and capable of firing from the second magazine.

11. The firearm of claim **9** wherein the second magazine is engaged with a second magazine operating block.

12. The firearm of claim **11** wherein the second magazine operating block is movable between an engaged and a disengaged position.

13. The firearm of claim **1** wherein the firearm can transition from a submachine gun mode to a pistol mode.

14. The firearm of claim **13** wherein the firearm can transition from a submachine gun mode to a pistol mode by a movement of the upper receiver.

15. The firearm of claim **1** wherein the upper receiver is movable between a submachine gun mode and a pistol mode.

16. The firearm of claim **1** wherein the upper receiver is securable in position relative to the lower receiver using a locking release cylinder.

17. The firearm of claim **16** wherein the locking release cylinder is attached to one of the upper receiver or the lower receiver.

18. The firearm of claim **16** wherein the locking release cylinder is engageable with a first locking slot on either the upper receiver or the lower receiver.

19. The firearm of claim **1** further comprising a striker in the upper receiver.

20. The firearm of claim **19** wherein the striker is operable to contact a cartridge to initiate firing.

* * * * *